Collection: Flynx
Installation manual for:
LD7044D26BK D26" H23" L6

Installation instructions:

1. Black wire from ceiling(junction box) attaches to "L"wire from the fixture.
2.White wire from ceiling(junction box) attaches to "N"wire from the fixture.
3. "E" wire from the fixture is attaced to the mounting bracket and an additional "E" wire from the mounting bracket must be secured to the junction box.
4.Secure mounting bracket to the junction box.
5.Twist tube(P10) to metal parts(P11), connect chain(P6) to Toothed ring (P7), connect chain(P6) to canopy(P4)
6.Separate and adjust the lamp arms,Use the screw(P3) to lock the lamp body to the mounting bracket(P1) on the ceiling.
7.Put the socket tube(P16) on the socket (P17) ,and install E12 light source.(Bulbs not supplied)
The end!

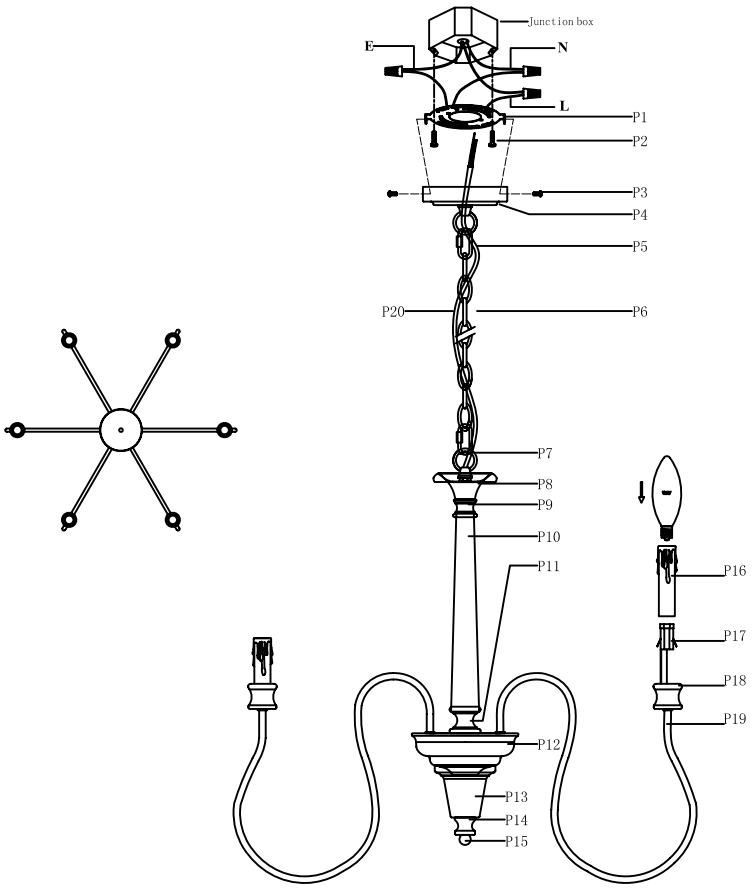

Part	Picture	Description	Qty	Check list
P1		mounting bracket Φ4.53″*H0.59″	1	
P2		Mounting bracket screw	2	
P3		Screw	2	
P4		Canopy (Φ4.72"*H1.02")	1	
P5		Activity buckle L1.5″*W0.78″*Φ0.15″	2	
P6		Hanging chain(CHAIN04P) L1.5″*W0.78″*Φ0.15″(Total lenghth 59″)	1	
P7		Toothed ring W1.3″*H1.6″, M10	2	
P8		Anti-edge cover Φ3.54″*H1.46″	1	
P9		metal parts Φ1.3″*H1.0″	1	
P10		Conical tube Φ1.57″+Φ0.98″*H7.87″	1	
P11		metal parts Φ1.7″*H1.5″	1	
P12		wire box cover Φ6″*H2.4″	1	
P13		wire box cover Φ3.4″*H2.9″	1	
P14		metal part Φ1.0″*H1.2″	1	
P15		nut Φ0.98″*H0.67″,M10	1	
P16		Socket tube Φ0.98″*H3.94″	6	
P17		E12 holder	6	
P18		metal parts Φ1.6″*H1.4″	6	
P19		Lamp arm L11.3″*H11.8″	6	
P20		UL18#SVT-3,L78.7″	1	

″L″ = Hot wire
″N″ = Neutral wire
″E″ = Ground wire