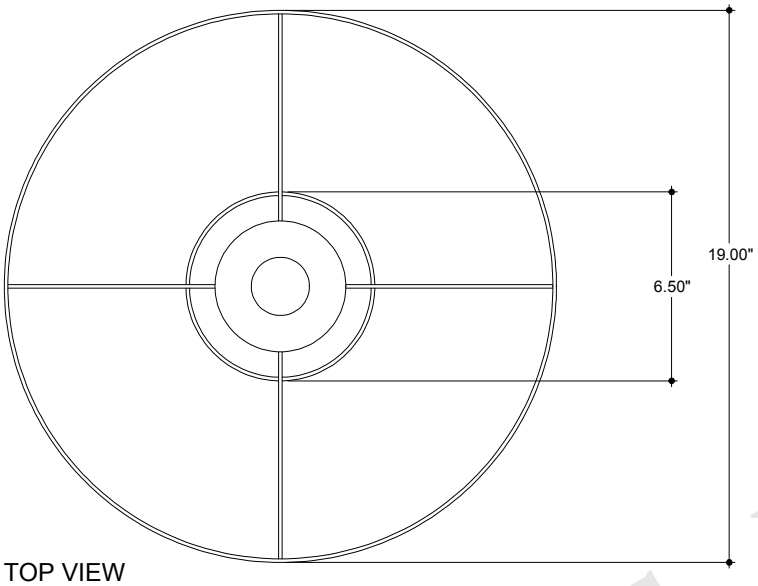

TOP VIEW

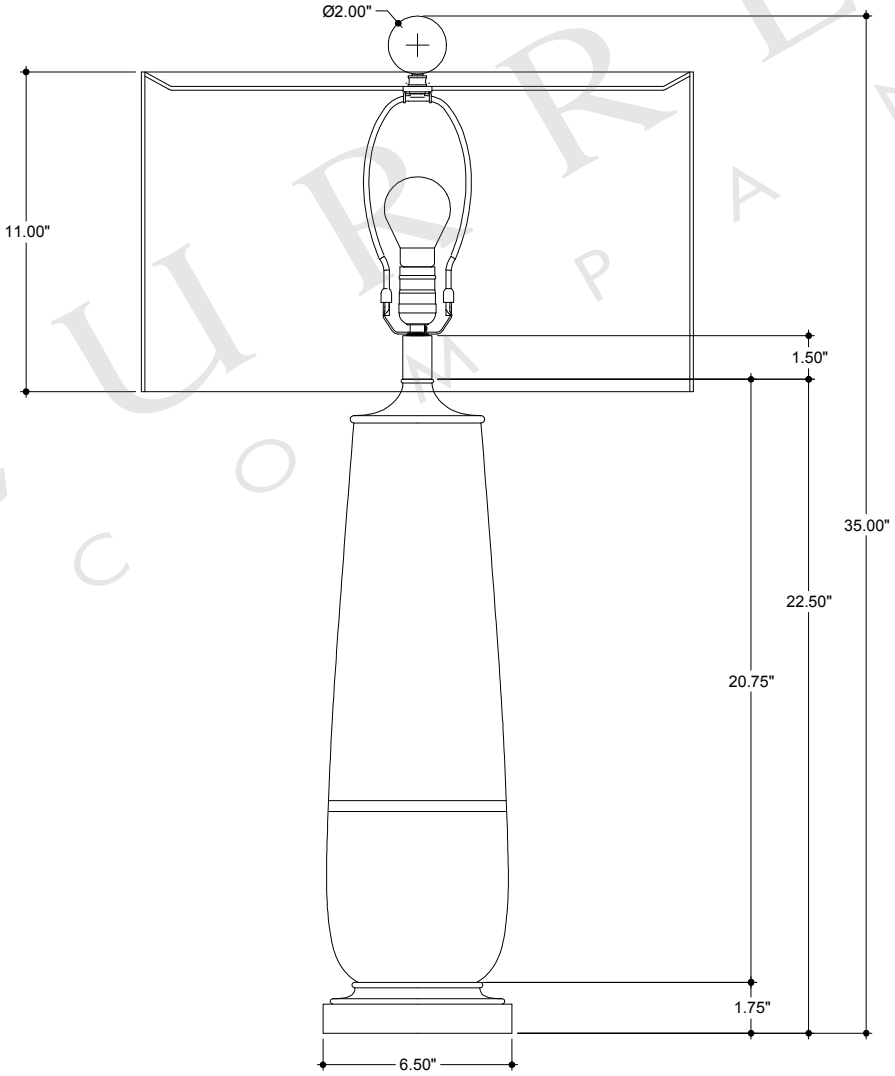

FRONT VIEW

6905

ALL WORK © 2015 CURREY & COMPANY